REVISIONS				
ZONE	REV	DESCRIPTION	DATE	APPROVED

Material List

Part	Material	Length	QTY
A	$\frac{1}{8}$" Plate	24"x24"	1
B	$\frac{1}{2}$ Round	22'-0"	1
C	1" Flat	2'-0"	1

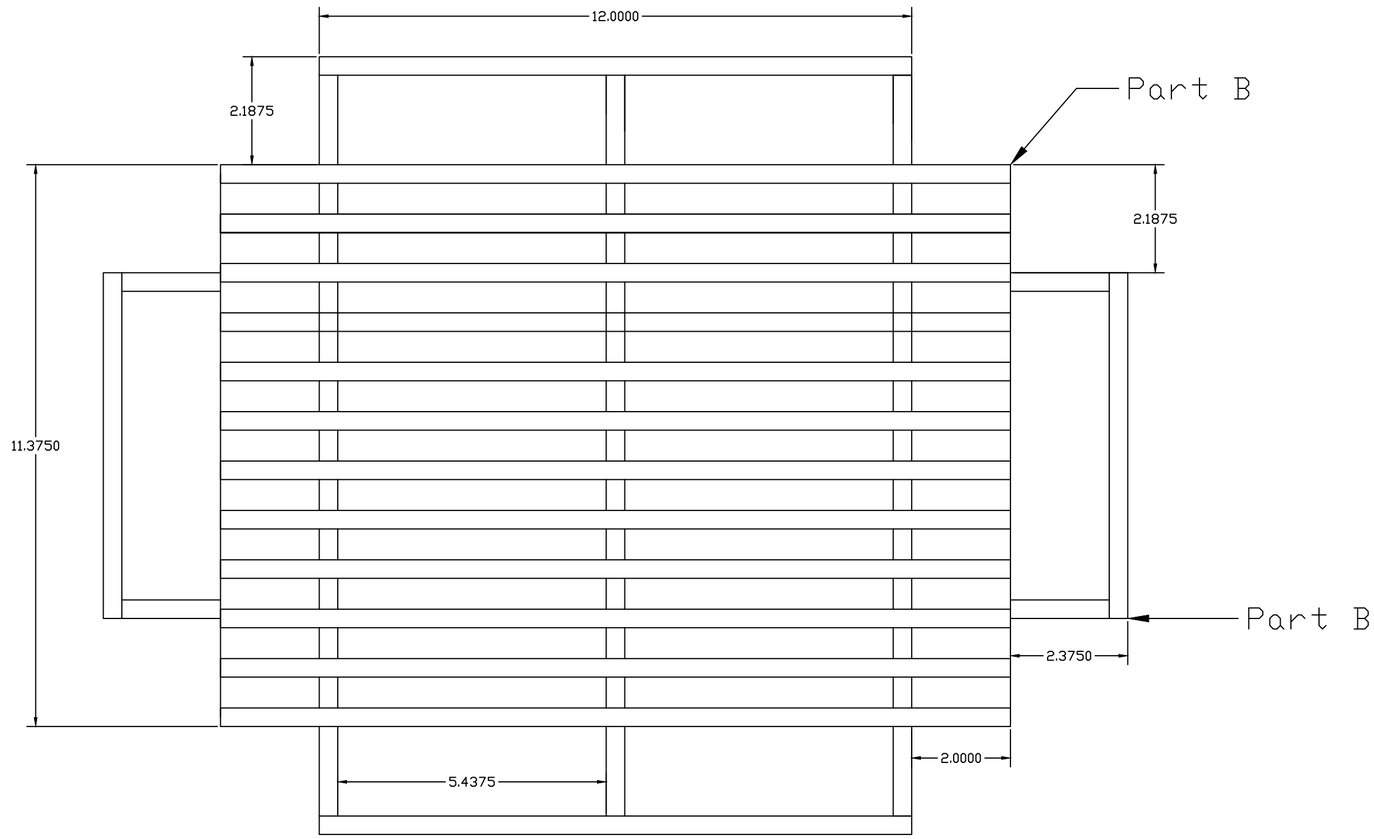

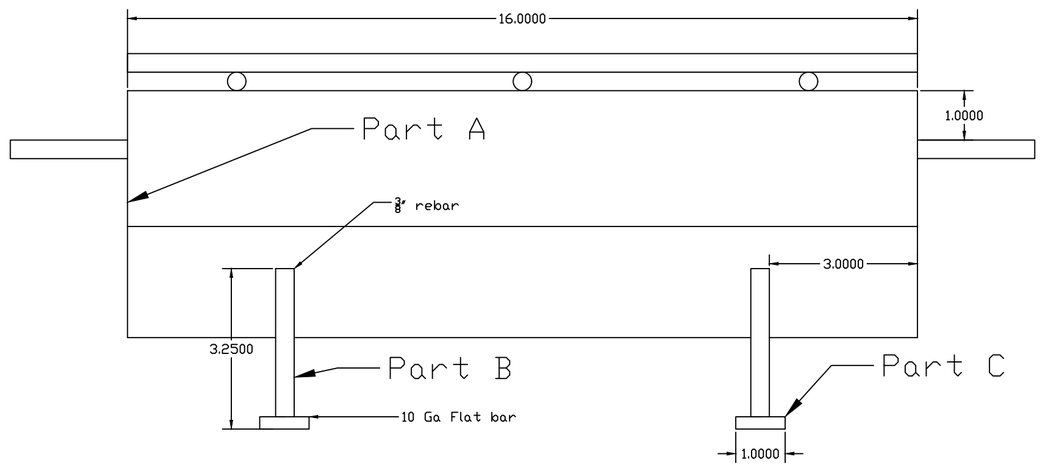

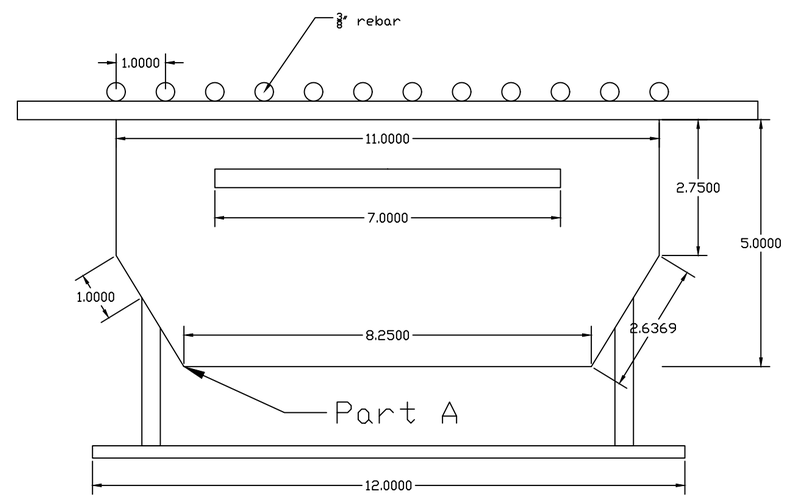

Notes:
1. All Material is plain carbon steel
2. Welding shall be done using FCAW-S (WPS1).
3. Drawing is not drawn to scale
4. All sharp edges shall be removed using angle grinder.
5. All welds shall be cleaned
6. Welds shall be completed all way around, except inside of grill

FILE NAME Habachi Grill.dwg				
CONTRACT NO ####				
DRAWN 11/30/2023	####			
CHECK				
APPR.				
ISSUED				
	SIZE	FSCM NO –	DWG NO fdf	REV
	SCALE 1:1		WEIGHT	SHEET